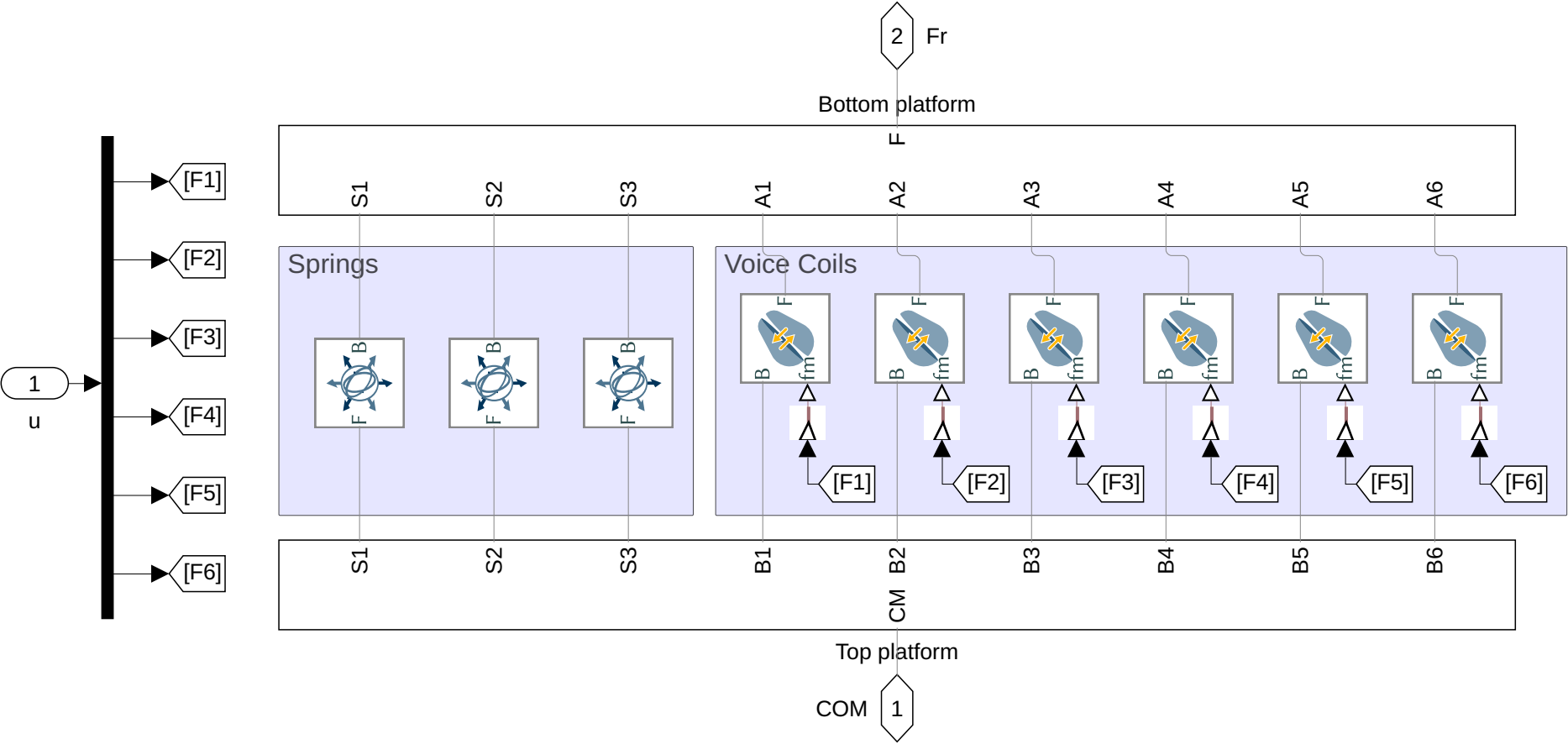
2
Fr
Bottom platform
F
S1
S2
S3
A1
A2
A3
A4
A5
A6
Springs
Voice Coils
B
F
fm
[F1]
[F2]
[F3]
[F4]
[F5]
[F6]
1
u
S1
S2
S3
B1
B2
B3
B4
B5
B6
CM
Top platform
COM
1