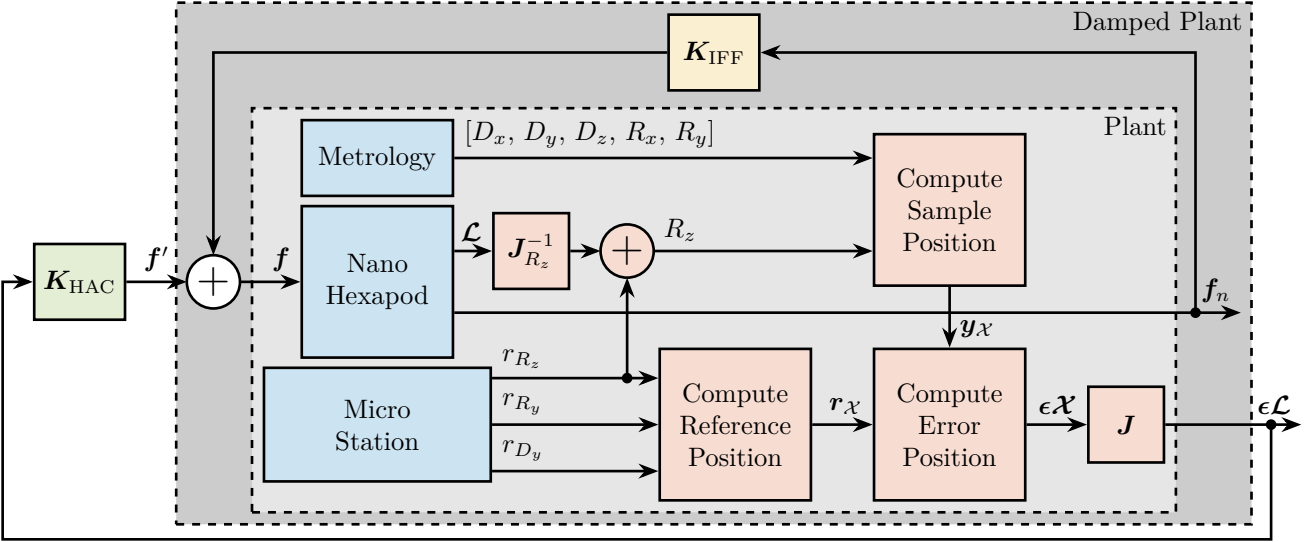
Damped Plant
$\boldsymbol{K}_{\mathrm{IFF}}$
Plant
Metrology
$[D_x,\, D_y,\, D_z,\, R_x,\, R_y]$
Compute Sample Position
$\boldsymbol{K}_{\mathrm{HAC}}$
$\boldsymbol{f}'$
$\boldsymbol{f}$
Nano Hexapod
$\boldsymbol{\mathcal{L}}$
$\boldsymbol{J}_{R_z}^{-1}$
R_z
$\boldsymbol{f}_n$
$\boldsymbol{y}_{\mathcal{X}}$
r_{R_z}
r_{R_y}
r_{D_y}
Micro Station
Compute Reference Position
$\boldsymbol{r}_{\mathcal{X}}$
Compute Error Position
$\boldsymbol{\epsilon}\boldsymbol{\mathcal{X}}$
$\boldsymbol{J}$
$\boldsymbol{\epsilon}\boldsymbol{\mathcal{L}}$