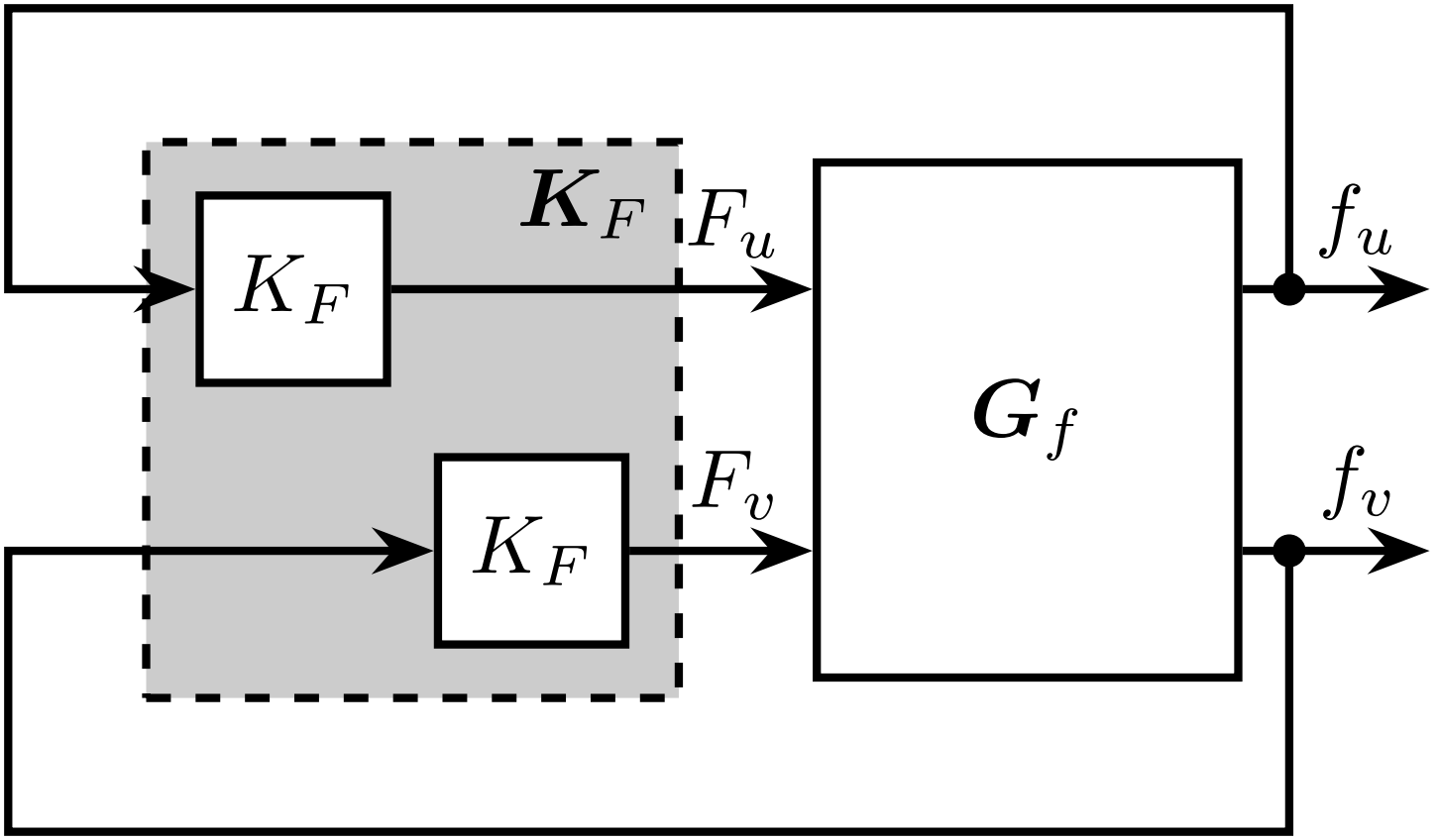
$\boldsymbol{K}_F$
K_F
K_F
F_u
F_v
$\boldsymbol{G}_f$
f_u
f_v